THE 1100 IS RAISED AND LOWERED BY ITS OWN SELF-CONTAINED HYDRAULIC SYSTEM THAT OPERATES AT A COMFORTABLE 2700 P.S.I. TO ALLOW THE BACKBOARD TO BE RAISED FROM THE STORED TO PLAYING POSITION IN SECONDS. WHEN ITS TIME TO MOVE THE 1100, THE FOLD DOWN IS JUST AS QUICK AND SIMPLE. ALL THIS AND MORE IS DONE BY THE MERE PUSH OF A BUTTON.

- FULL POWER DRIVEN SELF-CONTAINED HYDRAULIC SYSTEM
- FITTED WEIGHT BALLAST
- ACCURATE GOAL HEIGHT

OPTIONS:

- 10 PIECE PADDING KIT (2" THICK FOAM COVERED IN 30 OZ TEAR RESISTANT VINYL)
- 72" X 42" TEMPERED GLASS BACKBOARD
- BOLT-ON BACKBOARD EDGE PAD
- PRO-STRENGTH COLLAPSIBLE RIM AND NET
- SHOT CLOCK RACK
- FLOOR ANCHOR SYSTEM

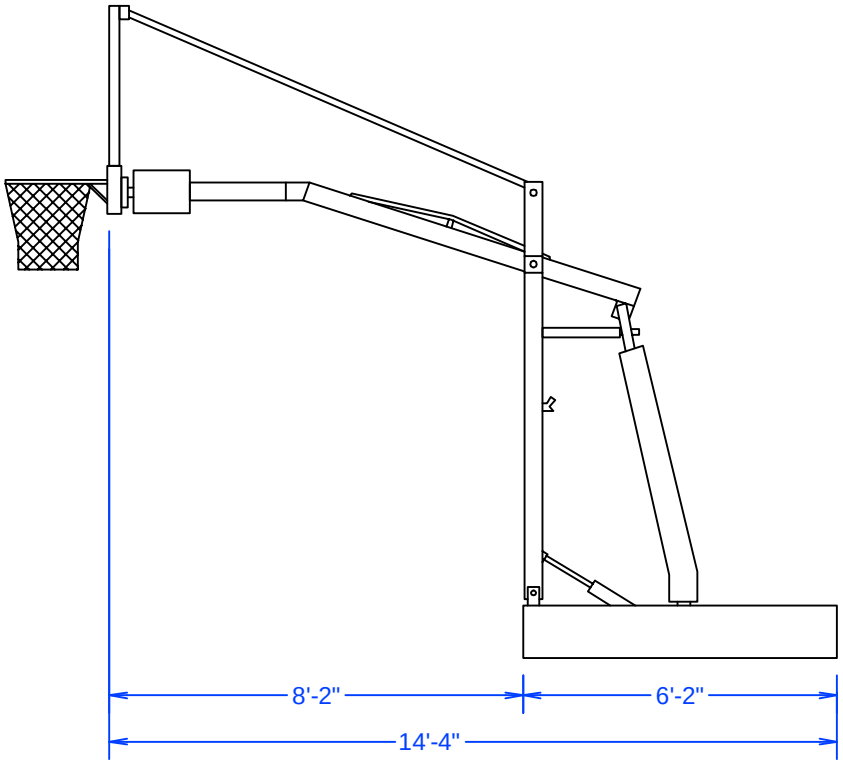

SIDE VIEW (PLAYING)

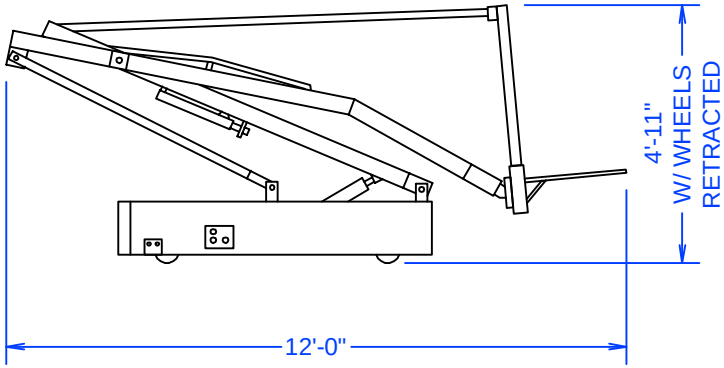

SIDE VIEW (STORAGE)

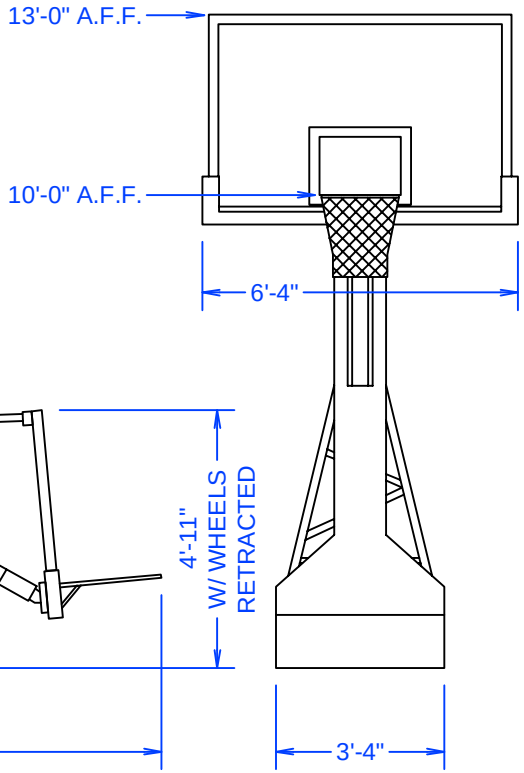

FRONT VIEW (PLAYING)

REVISION / STAGE:	MONTH / DAY / YEAR
ACI 1100	

RELATED DRAWINGS / INFORMATION:

THIS DRAWING IS PROPERTY OF ARIZONA COURTLINES, INC. AND MAY NOT BE REPRODUCED WITHOUT WRITTEN PERMISSION

ACI 1100

PORTABLE BASKETBALL UNIT

ARIZONA COURTLINES, INC.

8742 NORTH 78TH AVENUE
PEORIA, ARIZONA 85345
TEL. 623.939.8126
FAX. 623.939.2526
www.ARIZONACOURTLINES.com

DRAWN BY: EDDIE CAFFERAT

CHECKED BY:

QUANTITY: