ANCHORS TO BE SUPPLIED BY INSTALLER

IMPORTANT NOTES:

WELDED ASSEMBLY (NO BOLTING)
PROVIDE WELDED END CAPS FOR
ALL EXPOSED TUBE/PIPE ENDS.

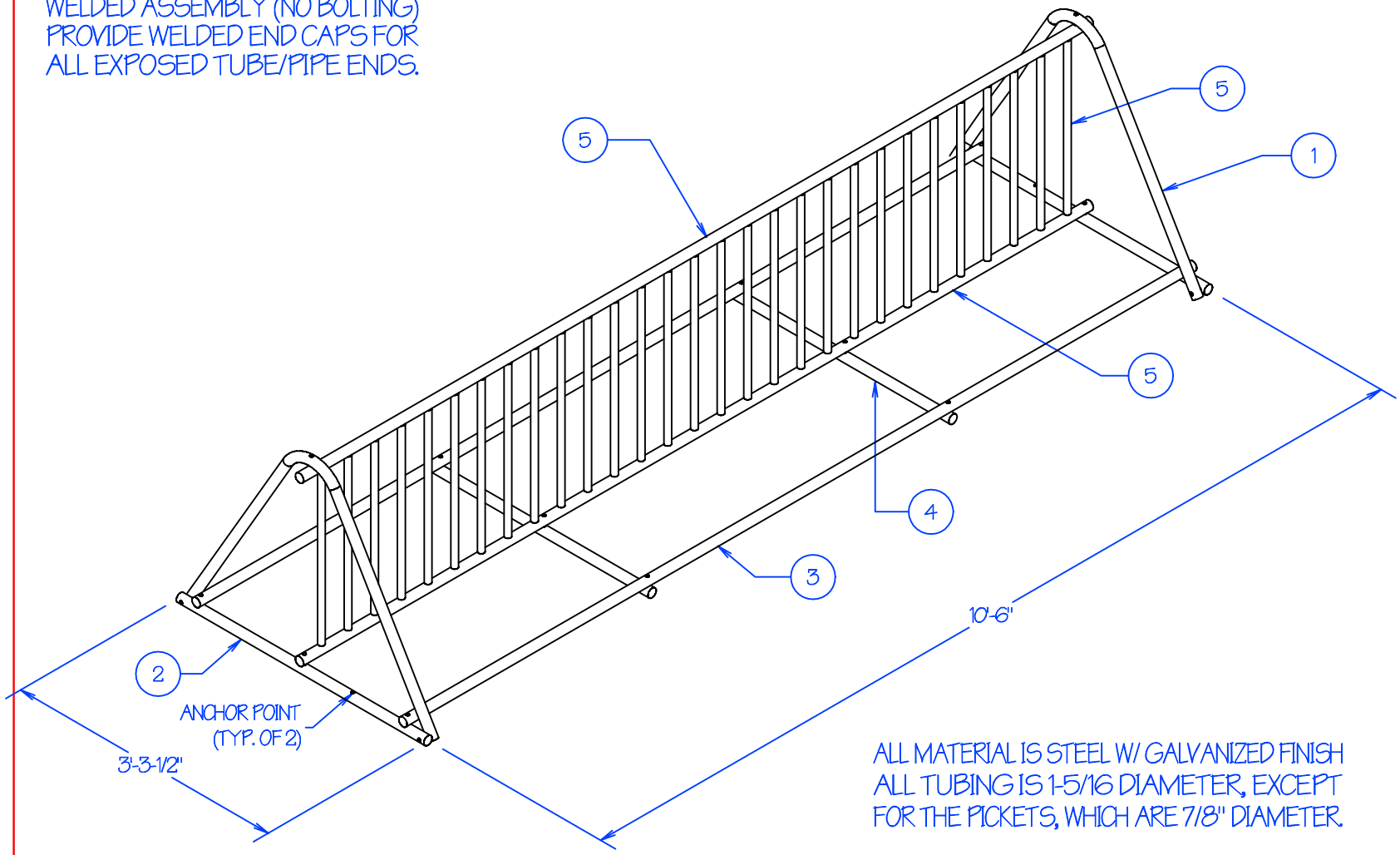

ALL MATERIAL IS STEEL W/ GALVANIZED FINISH
ALL TUBING IS 1-5/16 DIAMETER, EXCEPT
FOR THE PICKETS, WHICH ARE 7/8" DIAMETER.

PART #	QUANTITY
1	2
2	2
3	2
4	2
5*	1*

* PART # 5 IS A WELDED ASSEMBLY
AND CONSISTS OF 31 TOTAL PIECES.

REVISION / STAGE:	MONTH / DAY / YEAR	RELATED DRAWINGS / INFORMATION:
BR-DE-W		THIS DRAWING IS PROPERTY OF ARIZONA COURTLINES, INC. AND MAY NOT BE REPRODUCED WITHOUT WRITTEN PERMISSION

BR-DE-W

BIKE RACK - DOUBLE ENTRY - WELDED CONSTRUCTION

ARIZONA COURTLINES, INC.

8742 NORTH 78 TH AVENUE
PEORIA, ARIZONA 85345
PHONE (623) 939 - 8126
FAX (623) 939 - 2526
WWW.ARIZONACOURTLINES.COM

DRAWN BY: EDDIE CAFFERATA

CHECKED BY:

QUANTITY: