VERIFY OR SUPPLY DIMENSIONS

NAME: _____

FIRM: _____

SIGN: _____

DATE: _____

VERIFY OR SUPPLY DIMENSIONS. INFORMATION SHOULD BE VERIFIED AND OR SUPPLIED FROM MEASUREMENTS OF CONSTRUCTED BUILDING ONLY. BY SIGNING THIS YOU AGREE THAT ALL INFORMATION IS CORRECT AND ARIZONA COURTLINES, INC. IS TO PROCEED WITH MANUFACTURING.

I-BEAM DETAIL

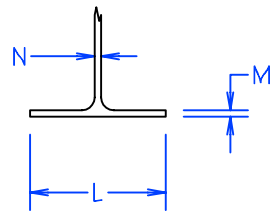

SPECIFY

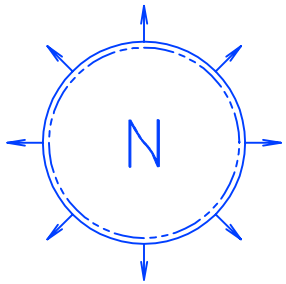

PROVIDE

A = _____

B = _____

C = _____

D = _____

E = _____

F = _____

G = _____

H = _____

I = _____

J = _____

K = _____

L = _____

M = _____

N = _____

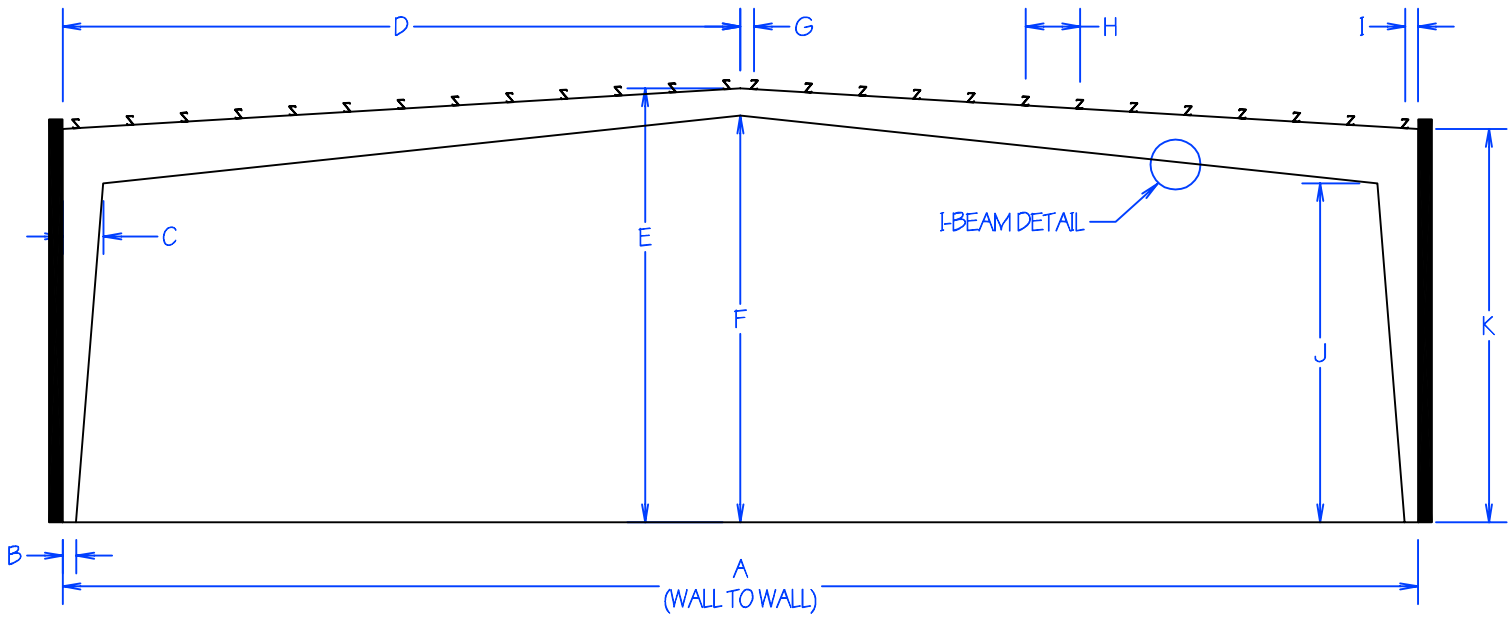

SPECIFY

- ☐ TAKE OFF FROM PLANS
- ☐ FIELD CHECK (BUILDING)

REVISION / STAGE:	MONTH / DAY / YEAR	RELATED DRAWINGS / INFORMATION:
FC-2.1		THIS DRAWING IS PROPERTY OF ARIZONA COURTLINES, INC. AND MAY NOT BE REPRODUCED WITHOUT WRITTEN PERMISSION

PROJECT: _____

TRUSS HEIGHT & LAYOUT

ARIZONA COURTLINES, INC.

8742 NORTH 78 TH AVENUE
PEORIA, ARIZONA 85345
PHONE (623) 939 - 8126
FAX (623) 939 - 2526
WWW.ARIZONACOURTLINES.COM

DRAWN BY: EDDIE CAFFERATA

CHECKED BY:

QUANTITY: _____