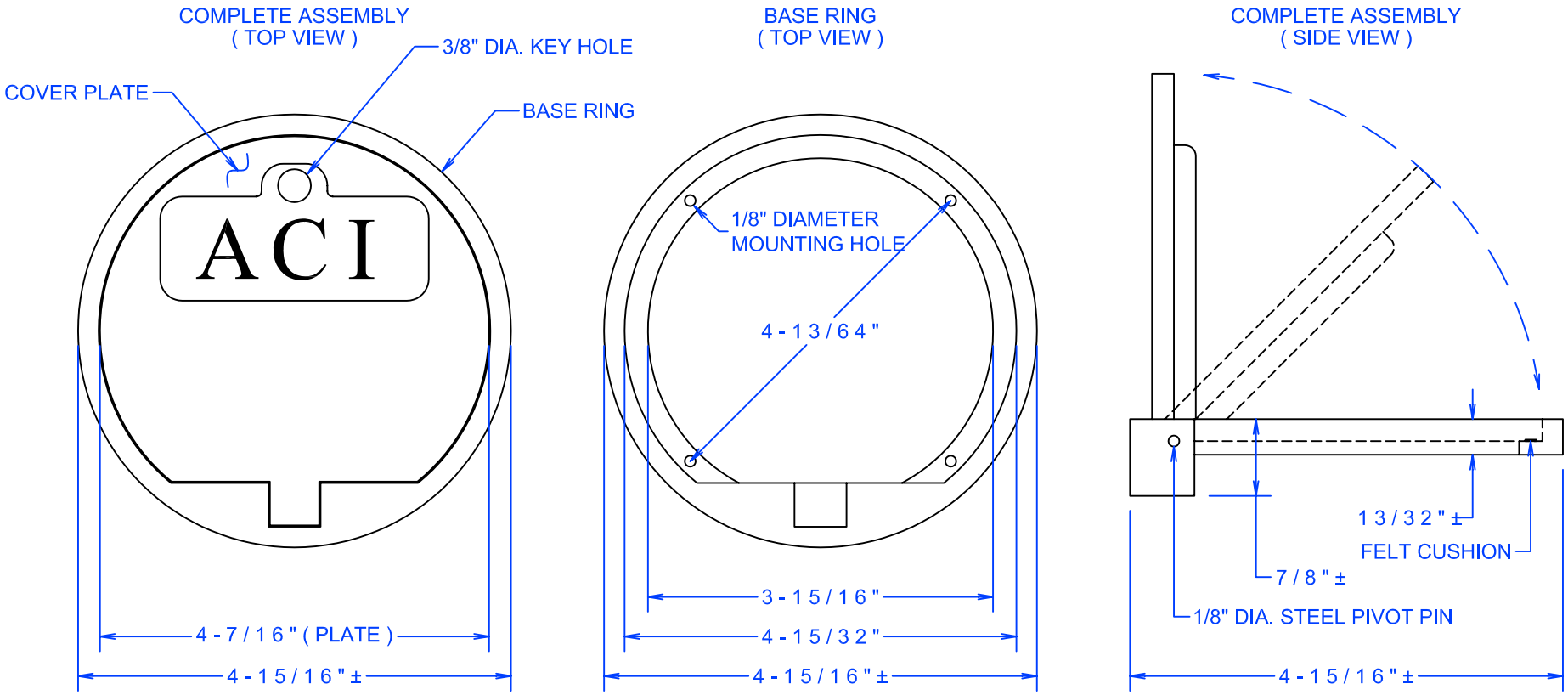

SPECIFICATIONS :
SOLID BRASS CASTING
TOP SURFACE GROUND FLAT AND CLEAR SEALED
FELT PAD CUSHION BETWEEN COVER PLATE AND BASE
FOUR MOUNTING HOLES (ANCHORS NOT INCLUDED)
1/8" DIAMETER SOLID STEEL PIVOT PIN
EASY OPEN KEY HOLE (KEYS, PENS, PENCILS, ETC.)
FOR USE WITH 2-3/8" O.D. POSTS AND SMALLER
FOR USE ON ALL TYPES OF FLOORS
SOLD AS ASSEMBLY ONLY
ONE YEAR WARRANTY (PARTS AND FACTORY LABOR)

INSTALL NOTES :
DIMENSIONS VARY SLIGHTLY .
DO NOT CUT HOLES UNTIL YOU HAVE COVER PLATE ASSEMBLY .
MEASURE ACTUAL COVER PLATE , CUT AND DRILL ACCORDINGLY .
TOP OF BASE RING AND COVER PLATE TO BE EVEN WITH PLAYING SURFACE .
CONCRETE CHIPPING MAY BE REQUIRED FOR CERTAIN FLOORS .
FOR WOOD FLOORS USE WOOD SCREWS .
FOR CONCRETE OR TILE USE SCREW WITH EXPANSION SHIELDS .
CENTER COVER ASSEMBLY WITH SLEEVE .

REVISION / STAGE:	MONTH / DAY / YEAR	RELATED DRAWINGS / INFORMATION:	F S - C P B 2	ARIZONA COURTLINES, INC.	DRAWN BY: EDDIE CAFFERATA
					CHECKED BY:
			FLOOR SLEEVE COVER PLATE BRASS HINGED (2-3/8" MAX. POST)	8742 NORTH 78 TH AVENUE PEORIA, ARIZONA 85345 PHONE (623) 939 - 8126 FAX (623) 939 - 2526 WWW.ARIZONACOURTLINES.COM	QUANTITY:
F S - C P B 2		THIS DRAWING IS PROPERTY OF ARIZONA COURTLINES, INC. AND MAY NOT BE REPRODUCED WITHOUT WRITTEN PERMISSION			