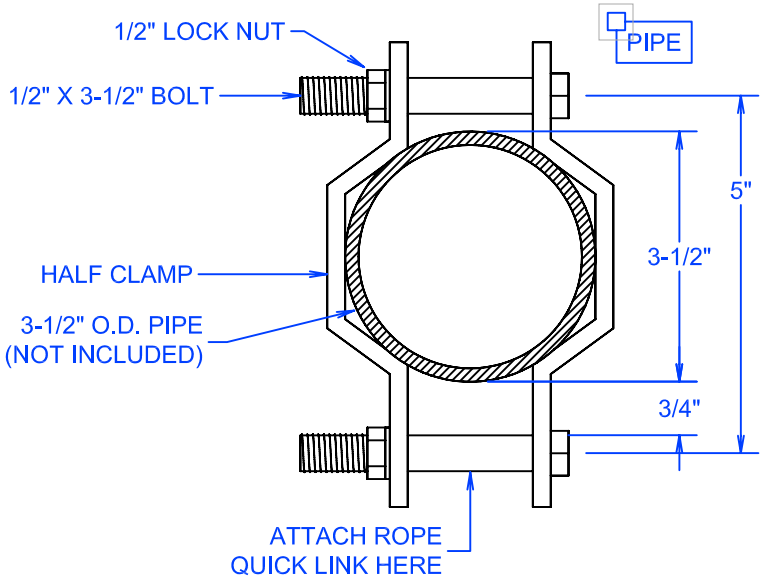

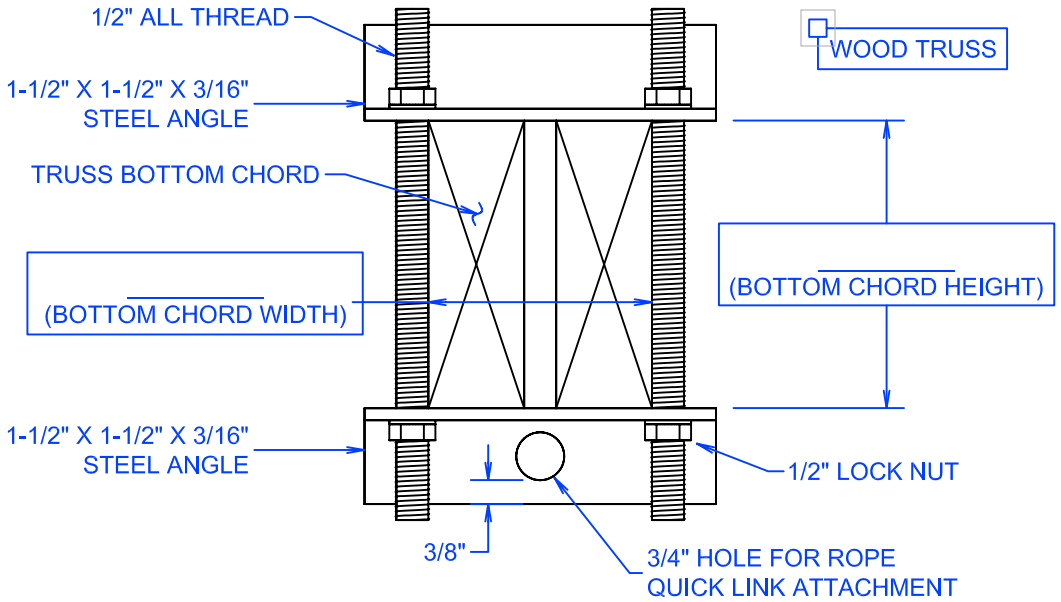

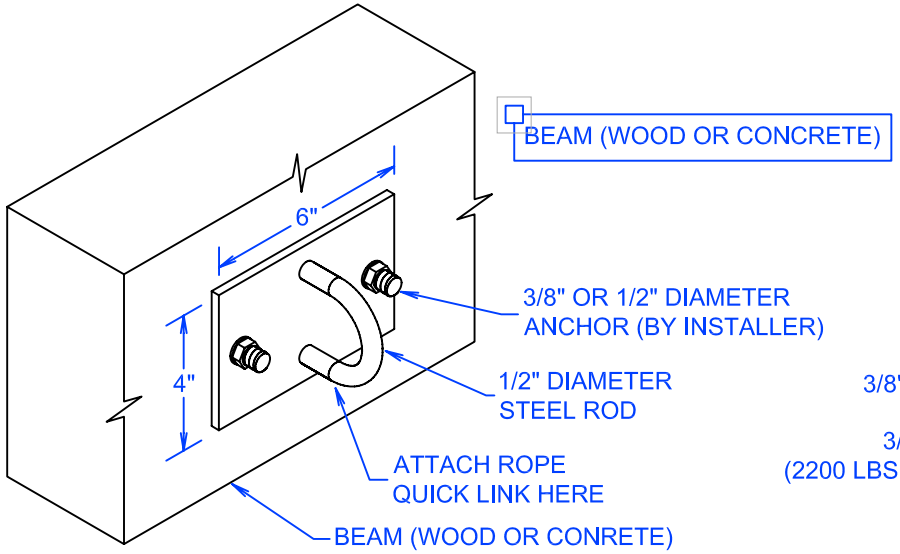

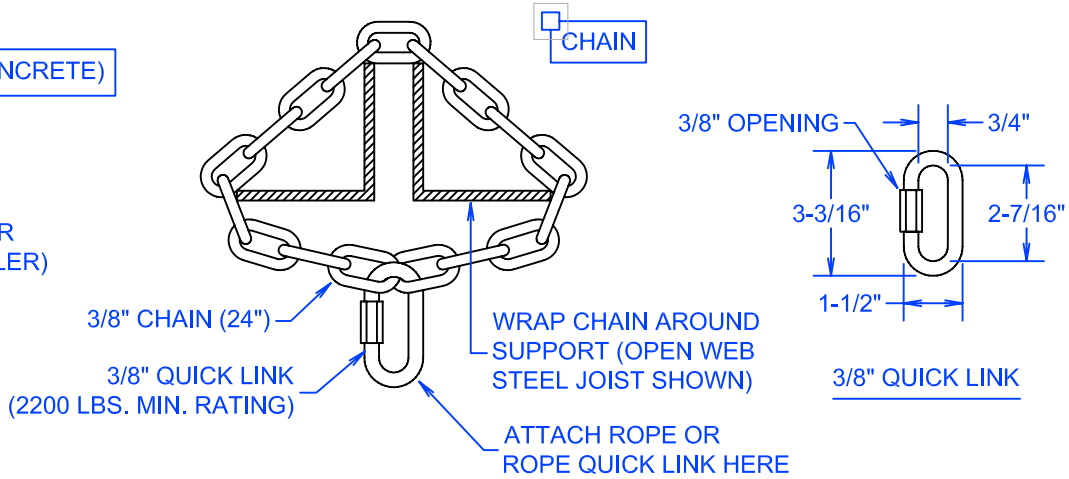

REVISION / STAGE:	MONTH / DAY / YEAR	RELATED DRAWINGS / INFORMATION:
RC-01M		THIS DRAWING IS PROPERTY OF ARIZONA COURTLINES, INC. AND MAY NOT BE REPRODUCED WITHOUT WRITTEN PERMISSION

CLIMBING ROPE MOUNT OPTIONS

FOR USE WITH SINGLE CLIMBING ROPE SYSTEMS

ARIZONA COURTLINES, INC.
8742 NORTH 78TH AVENUE
PEORIA, ARIZONA 85345
TEL. 623.939.8126
FAX. 623.939.2526
www.ARIZONACOURTLINES.com

DRAWN BY: EDDIE CAFFERATA

CHECKED BY:

QUANTITY: